REMOVABLE BOWL

SPIRAL MIXER

ALIGN INDUSTRY



Hand-inspired geometry.
Industrial mastery.


BEFORE FERMENTATION.
BEFORE SHAPING.
BEFORE BAKING.
THERE IS MIXING.
Gluten alignment defines structure.
Temperature defines fermentation control.
Kneading defines consistency.
MIXING IS
NOT A STEP.
IT IS THE
STANDARD.



REMOVABLE BOWL **SPIRAL MIXER**

Built on precision engineering and deep industrial understanding, the ALIGN Spiral Mixer is designed to deliver consistent, high-quality dough at scale.

Every element from hand-inspired spiral geometry to drive mechanics
works in harmony to optimise mixing performance, maintain temperature control, and ensure structural consistency across every batch.

- Hand-inspired spiral geometry for natural kneading and better gluten structure
- Maintains optimal dough temperature (27–30°C) for controlled fermentation
- Minimal spiral-to-bowl clearance for uniform mixing
- Heavy-duty gear system for stable torque under continuous load
- Digital display for precise control and monitoring
- Reduced mixing time for improved productivity
- Anti-vibration design for low maintenance and smooth operation
- Food-grade stainless steel components for hygiene and durability



ENGINEERED IN MOTION

Where Every Component Works in Alignment



CENTRAL SHAFT (SCRAPER SHAFT)

Designed to guide dough flow and ensure uniform movement throughout the mixing cycle.

- 25 mm shaft for structural stability
- Angular fitting for controlled thermodynamics
- Curve aligned with spiral arm geometry and bowl radius for continuous dough flow

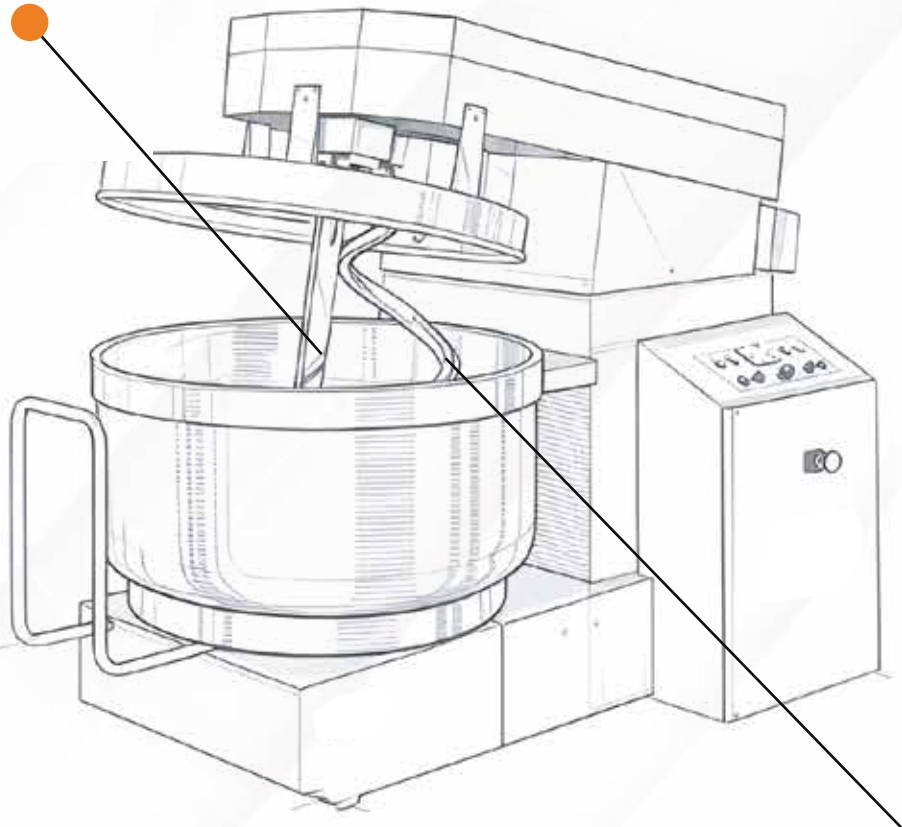

SPIRAL ARM

Inspired by a master baker's touch, the arm geometry mimics traditional kneading stretching and folding dough for consistent development and better thermal control.

- 45 mm SS rod for enhanced strength and stability
- Optimised spiral angle for structured gluten formation
- Works in alignment with the shaft & the bowl for uniform mixing




ALIGN

MODEL	AIRBSM 120	AIRBSM 160	AIRBSM 200
Dough Capacity (Kg)	120	160	200
Flour Capacity (Kg)	75	100	125
Bowl Capacity (lt)	200	273	326
Bowl ϕ (mm)	750	90	100
Bowl (rpm)	16	16	16
Spiral Arm RPM (Slow-Fast)	110 / 210	110 / 210	110 / 210
Power Consumption (kW)	7.5 / 12.5	7.5 / 12.5	12.5/ 15.0
Machine Dimension (mm)	(L: 1850 X W: 940 H: 1470)	(L: 2001 X W: 1027 H: 1500)	(L: 2031 X W: 1060 H: 1500)
Machine Weight (Kg)	1150	1250	1400

ELECTRICAL SYSTEM: SIEMENS INDUSTRIAL BOARD **POWER SUPPLY:** 3 PHASE **FREQUENCY:** 50/60 HZ

BUILT WITH **TRUSTED COMPONENTS**

SIEMENS



SIEMENS EMERGENCY STOP PUSH BUTTON

Schneider Electric



SCHNEIDER ELECTRIC INDUSTRIAL ROTARY SWITCH

MITSUBISHI ELECTRIC
Changes for the Better



MITSUBISHI ELECTRIC HMI CONTROL PANEL

Bilz®



GERMAN BILZ ANTI VIBRATION PADS

ALIGN
INDUSTRY



Contact Us

+91 8530 149 363, +91 9834 270 401

processequipments@alignindustry.com

F : 33, MIDC, Satpur, Nashik, Maharashtra-422007

align_processequipments

www.alignindustry.com